NO	DATE	REVISIONS	E.O.NO	DR	CK

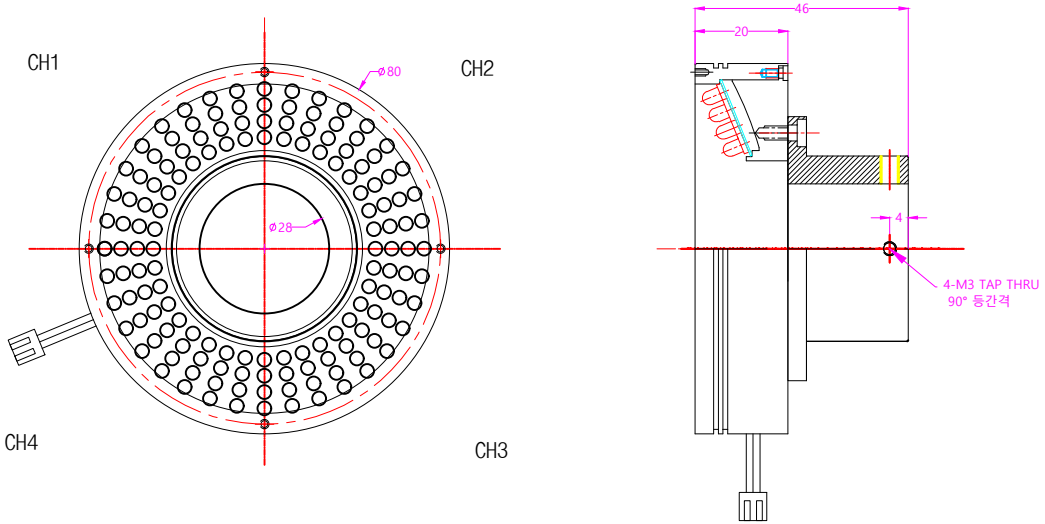

-SPECIFICATIONS-

MATERIAL : ALUMINUM

TREATMENTS : BLACK ANODIZING

LED : 3,WHITE

VOLTAGE: DC 12/24V, 1 / 4 CH

-FOR 1CH 12V:SMR-02V-B,24V:SMR-03V-B

-FOR 4CH CABLE : LS CABLE ROVV M05C030

CH1 : BLACK

CH2 : WHITE

CH3 : GREEN

CH4 : BLUE

COMMON : RED(+)

QT'Y	NO	품 번	품 명	MATERIAL	REMARK

비 고

일자(DATE) 2021. 11. 29

NS(DRAWN) 검도(CHECKED) 승인(APPROVED) 승인(APPROVED)

눈금(따지) 말것 DO NOT SCALE

PART NAME

지시없는치수(UNLESS OTHERWISE SPECIFIED)
ANGLE DIM
SECTION DIM
DIM

수량(QTY) 1

중량(WT)g

척도(SCALE) NS

재질(MATERIAL)

승인(APP'V)

표면처리(FINISH)

제3각법 THIRD ANGLE

단위:mm DIMENSION MILLIMETER

PART NO.

품명(PART NAME) JDL-80-28-취부도

도번(PART NO) C

도면크기(FORM) A1N5

매(SHT) 01 / 01 총매(SHTS)